IoT Gateway for data management cloud

Solution for Ho.Re.Ca., ice-cream and pastry, farm food shops and small food stores

The IoT Gateway for Data Management Cloud solution, which includes both portal and Wi-Fi gateway, has been developed with special attention to applications for Ho.Re.Ca., ice-cream & pastry, farm food shops, gas stations, butcheries, and small food stores. The offered solution requires the use of Copeland electronic controllers (for refrigerated cabinets, counters, etc.).
The optimized food preservation for the food industry is guaranteed through the collection and storage of necessary data for HACCP evaluation as well as through the alarm notifications of the connected refrigerated cabinets.
The remote control allows to intervene on each single cabinet every time maintenance or parameter changes are needed, guaranteeing rapid response.



Dimensions

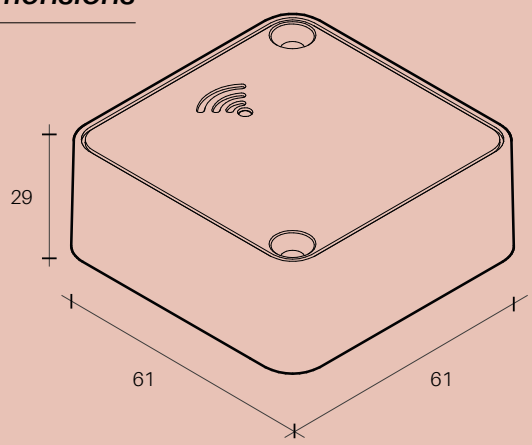

Technical features

MODEL	XIG100
Network connection	Wi-Fi 2,4GHz
Controller connection	Modbus RS485
Power supply	Grid 85÷230Vac USB-C 5Vdc; 300mA
Probe inputs	2 x NTC, 2 wires
Mounting	2 Φ4,2 pass trough or double-sided tape

COPELAND
Engineered for Sustainability

The complete solution

The solution is composed of the Cloud portal, and the Wi-Fi gateway connected to the controllers directly installed on the units in the field.
Copeland offers a management system that is completely integrated and highl flexible, adapting itself perfectly to the needs of any kind of users.

Cloud portal

- Plug&play
- Simplified control
- Complete security
- Optimized maintenance
- Optimized visualization
- Energy saving
- Food quality





- Bottle coolers
- Plug-in cabinets

- Cold rooms

- Pastry cases
- Ice cream cases

LOGITRON s.r.o. | Jeremiášova 947/16, 155 00 PRAHA 5
info@logitron.cz
Release 1.0 - 1582008000-GB
Více na logitron.cz
©2024 Copeland LP

COPELAND
Engineered for Sustainability